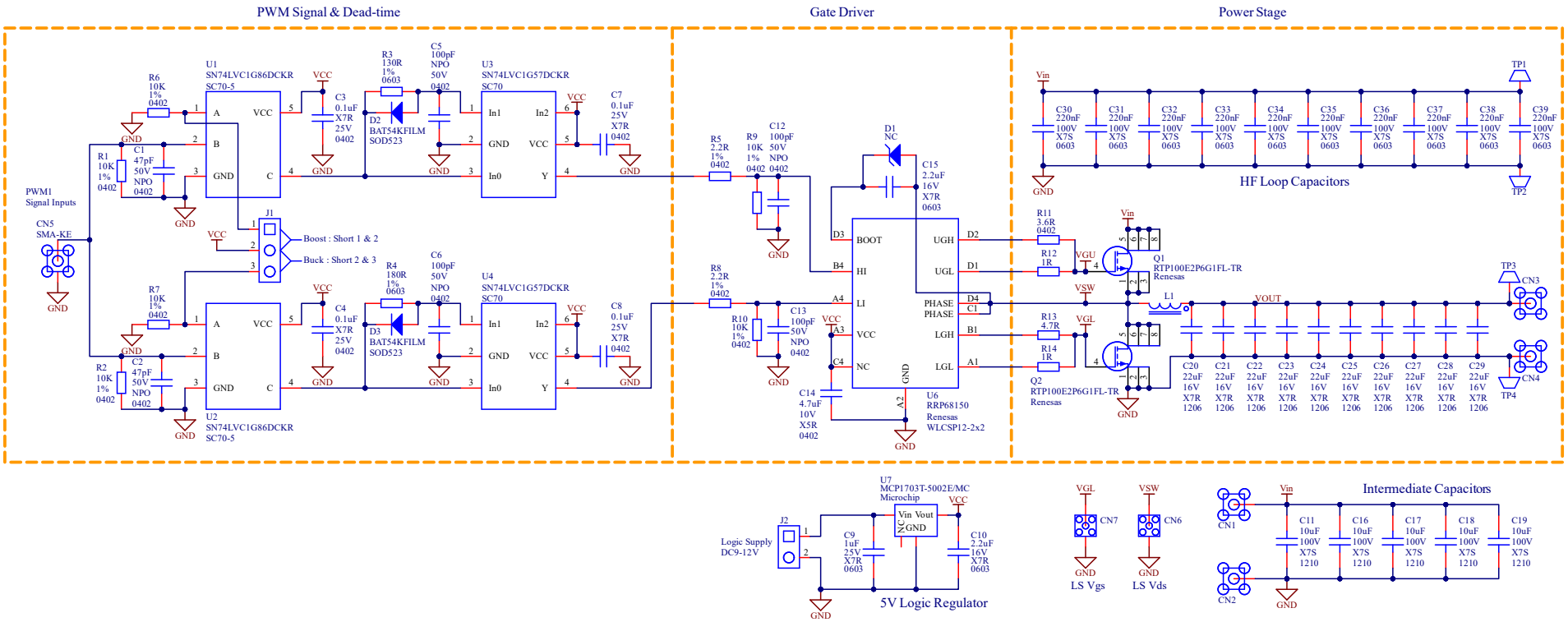EVB-RTP100E2P6G1FL Schematic Diagram